Bangladesh Army University of Engineering & Technology (BAUET)

CSE 3213: Computer Architecture

Topic: Introduction to Computer Architecture (Computer Design, Processor Design, Information Representation and Different Architecture)

Prof. Dr. Boshir Ahmed

Computer Architecture

The definition of basic attributes of hardware components and their interconnections, in order to achieve certain specified goals in terms of functions and performance.

Example: Instruction set,
memory address techniques.

Computer Organization

The design and physical arrangement of various hardware units to work in tandem, in an orderly manner, in order to achieve the goals specified in the architecture.

Example: Control signals.

What is a program?

- A sequence of steps
- For each step, an arithmetic or logical operation is done
- For each operation, a different set of control signals is needed

Function of Control Unit

- For each operation a unique code is provided
  - e.g. ADD, MOVE
- A hardware segment accepts the code and issues the control signals

- We have a computer!

Components

- The Control Unit and the Arithmetic and Logic Unit constitute the Central Processing Unit
- Data and instructions need to get into the system and results out
  - Input/output
- Temporary storage of code and results is needed
  - Main memory

Computer Components: Top Level View

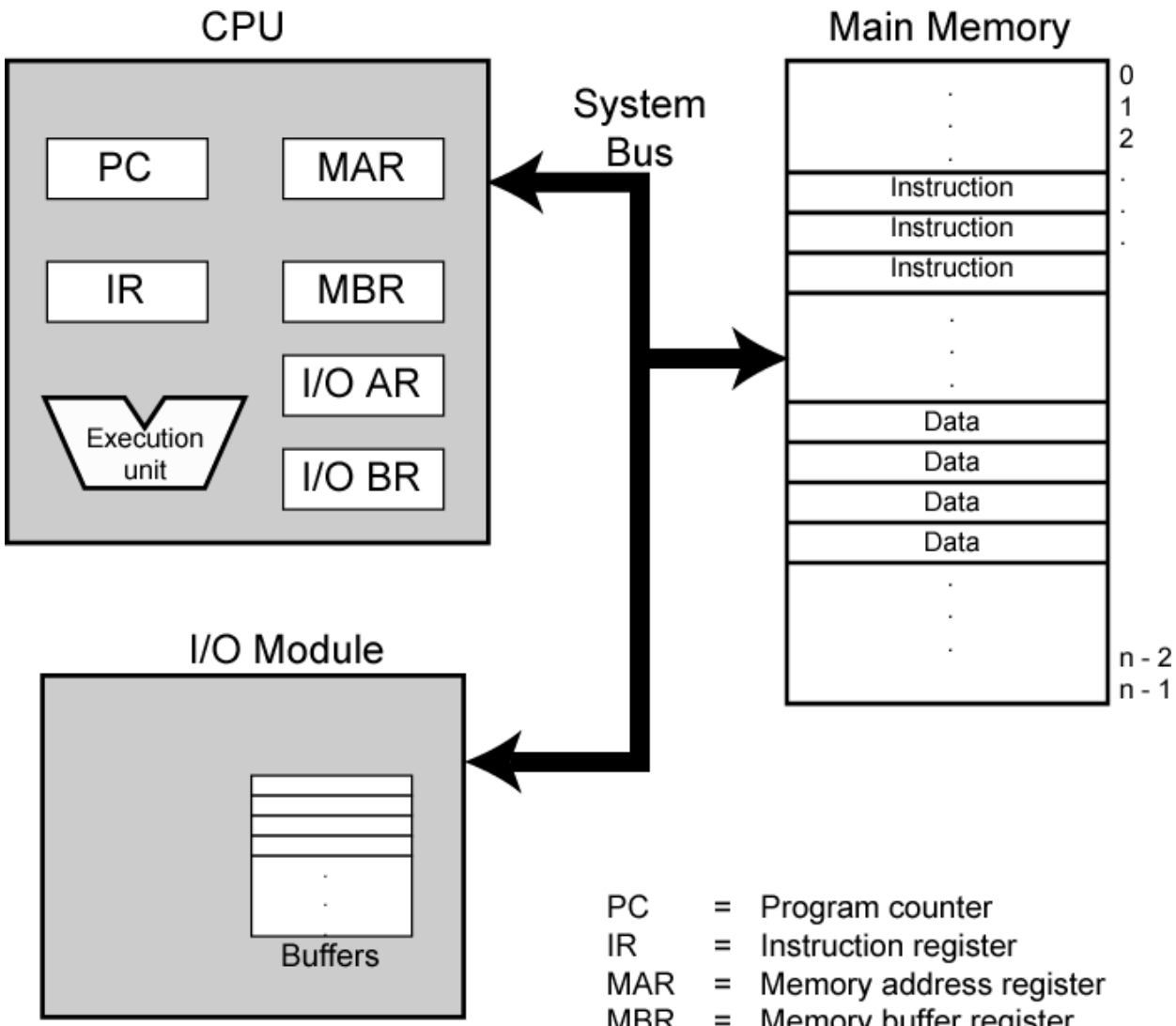

PC = Program counter
IR = Instruction register
MAR = Memory address register
MBR = Memory buffer register
I/O AR = Input/output address register
I/O BR = Input/output buffer register

Instruction Cycle

- Two steps:
  - Fetch
  - Execute

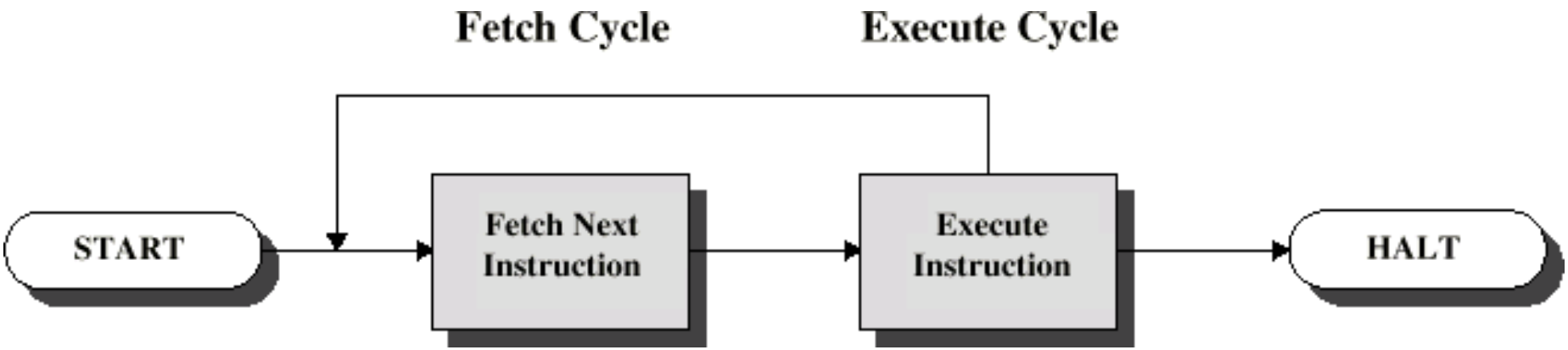

Fetch Cycle

- Program Counter (PC) holds address of next instruction to fetch
- Processor fetches instruction from memory location pointed to by PC
- Increment PC
  - Unless told otherwise
- Instruction loaded into Instruction Register (IR)
- Processor interprets instruction and performs required actions

Execute Cycle

- Processor-memory
  - data transfer between CPU and main memory
- Processor I/O
  - Data transfer between CPU and I/O module
- Data processing
  - Some arithmetic or logical operation on data
- Control
  - Alteration of sequence of operations
  - e.g. jump
- Combination of above

Example of Program Execution

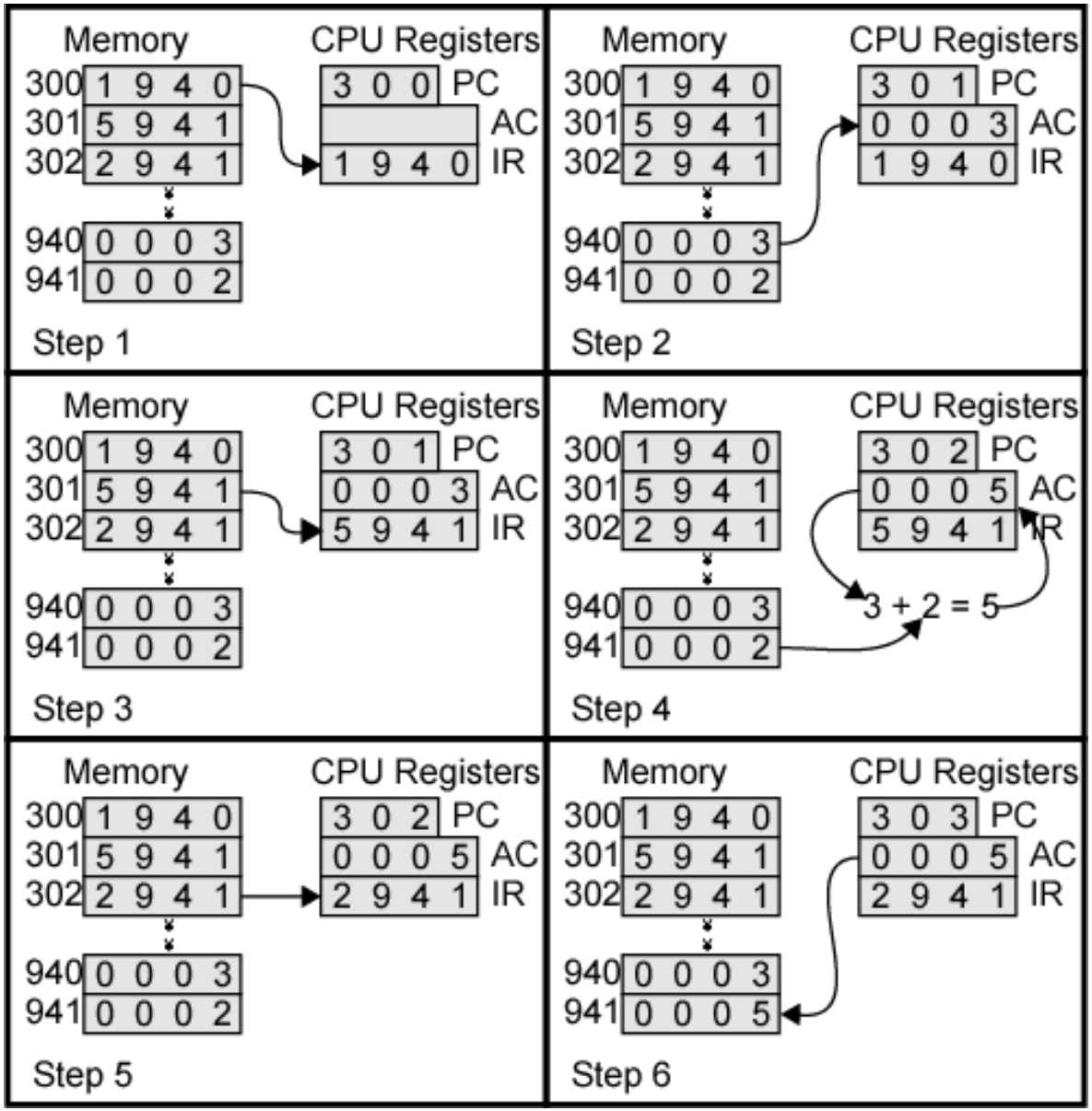

Instruction Cycle State Diagram

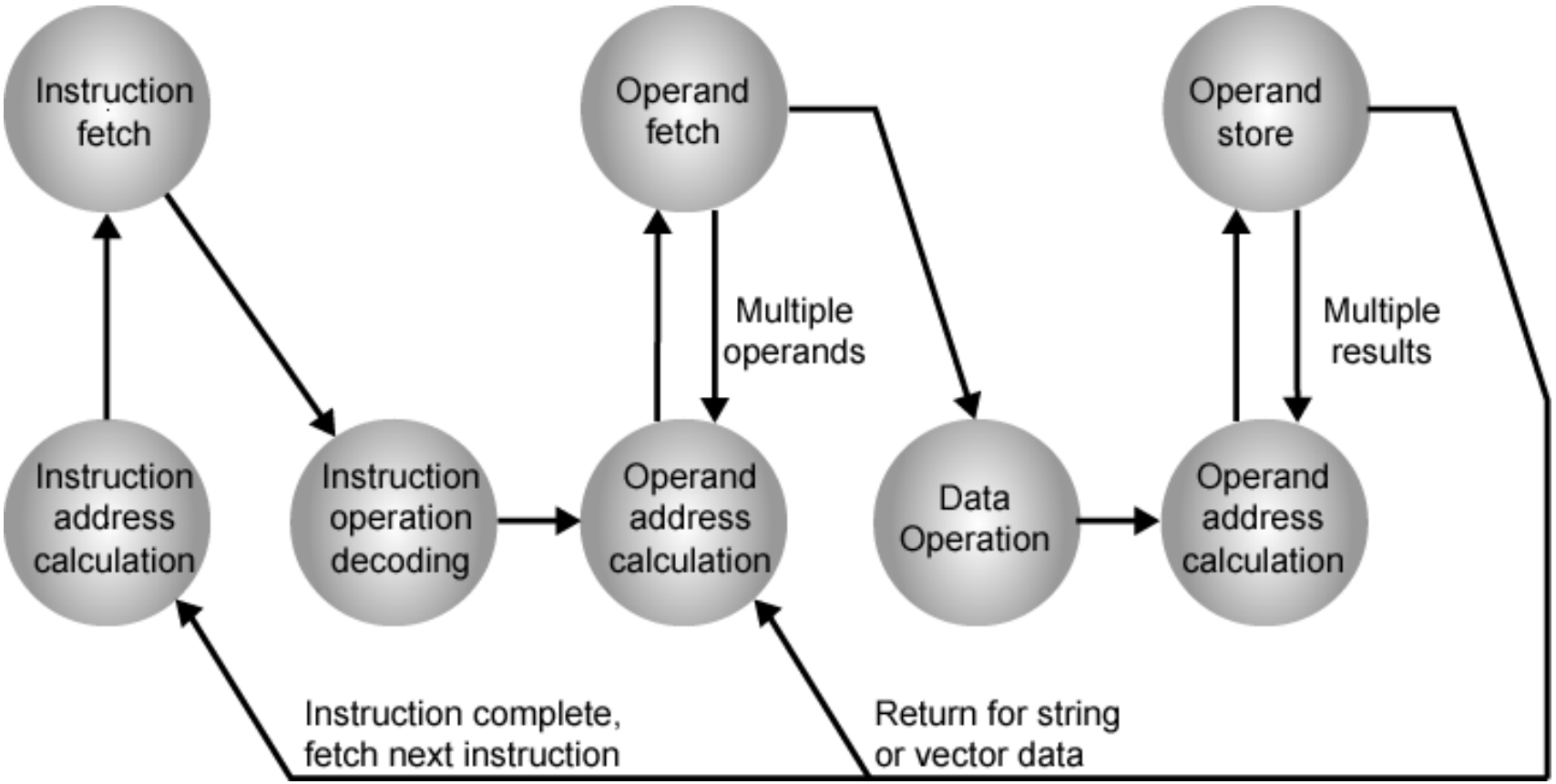

Instruction Cycle (with Interrupts) - State Diagram

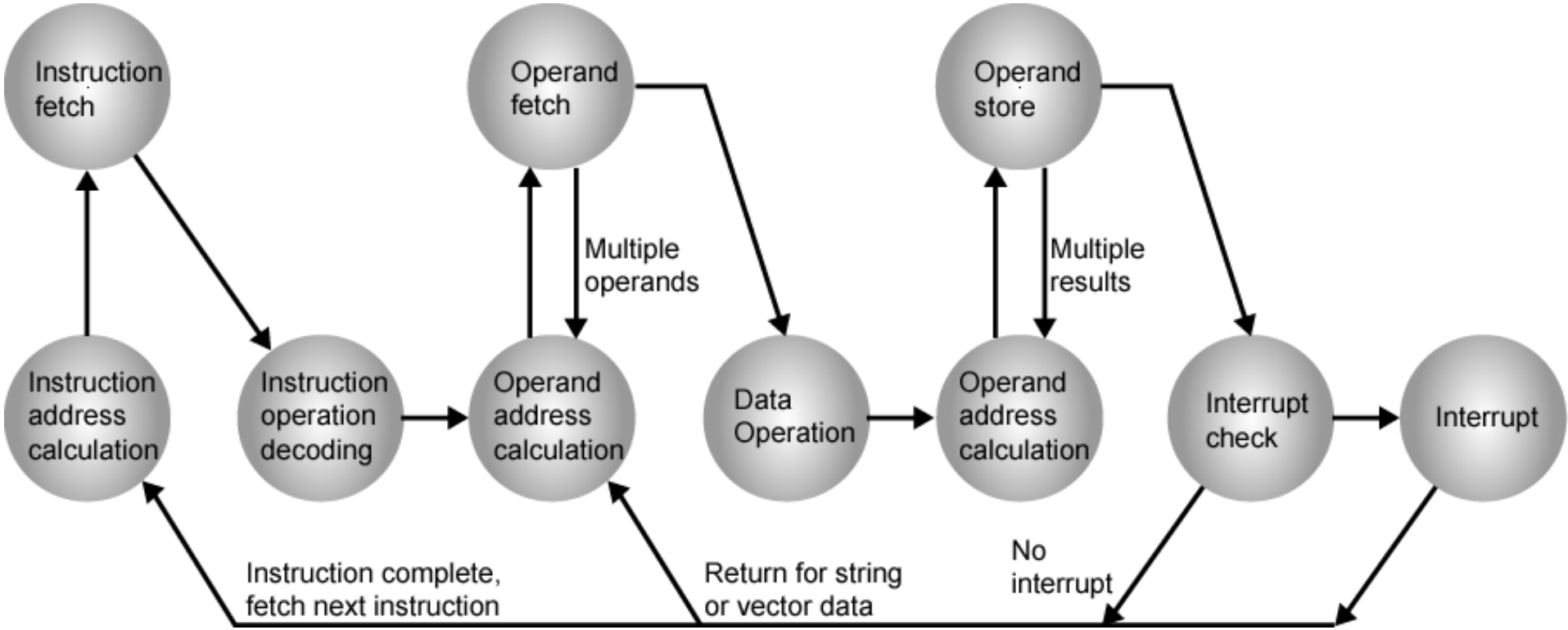

Connecting

- All the units must be connected
- Different type of connection for different type of unit
  - Memory
  - Input/Output
  - CPU

Computer Modules

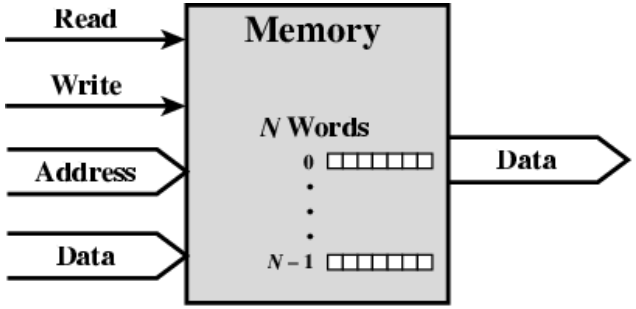

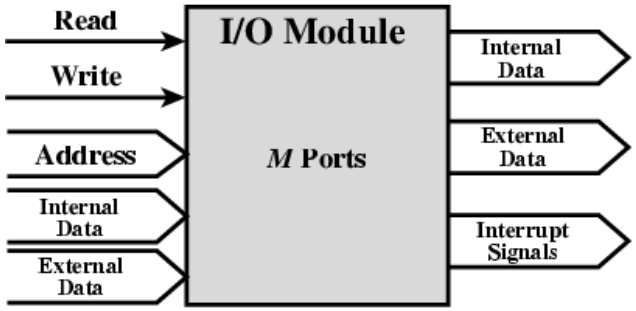

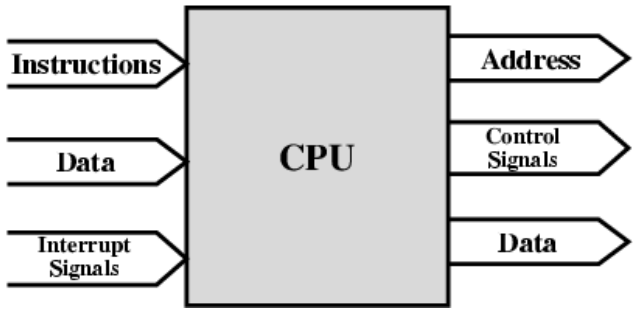

Memory Connection

- Receives and sends data
- Receives addresses (of locations)
- Receives control signals
  - Read
  - Write
  - Timing

Input/Output Connection(1)

- Similar to memory from computer's viewpoint
- Output
  - Receive data from computer
  - Send data to peripheral
- Input
  - Receive data from peripheral
  - Send data to computer

Input/Output Connection(2)

- Receive control signals from computer
- Send control signals to peripherals
  - e.g. spin disk
- Receive addresses from computer
  - e.g. port number to identify peripheral
- Send interrupt signals (control)

CPU Connection

- Reads instruction and data
- Writes out data (after processing)
- Sends control signals to other units
- Receives (& acts on) interrupts

Buses

- There are a number of possible interconnection systems
- Single and multiple BUS structures are most common
- e.g. Control/Address/Data bus (PC)
- e.g. Unibus (DEC-PDP)

What is a Bus?

- A communication pathway connecting two or more devices
- Usually broadcast
- Often grouped
  - A number of channels in one bus
  - e.g. 32 bit data bus is 32 separate single bit channels
- Power lines may not be shown

Data Bus

- Carries data
  - Remember that there is no difference between “data” and “instruction” at this level
- Width is a key determinant of performance
  - 8, 16, 32, 64 bit

Address bus

- Identify the source or destination of data
- e.g. CPU needs to read an instruction (data) from a given location in memory
- Bus width determines maximum memory capacity of system
  - e.g. 8080 has 16 bit address bus giving 64k address space

Control Bus

- Control and timing information
  - Memory read/write signal
  - Interrupt request
  - Clock signals

Bus Interconnection Scheme

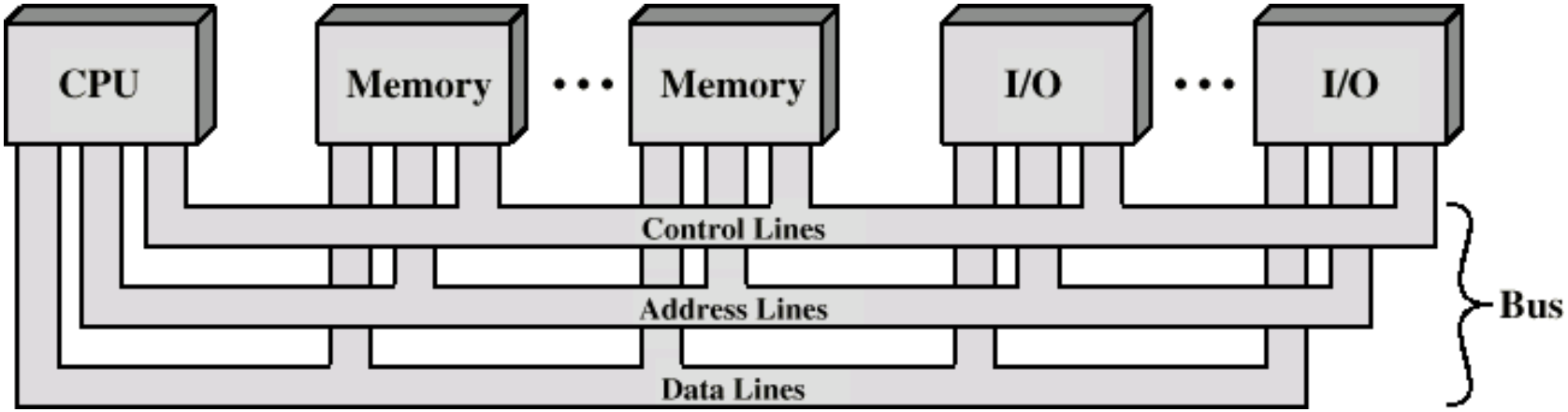

Physical Realization of Bus Architecture

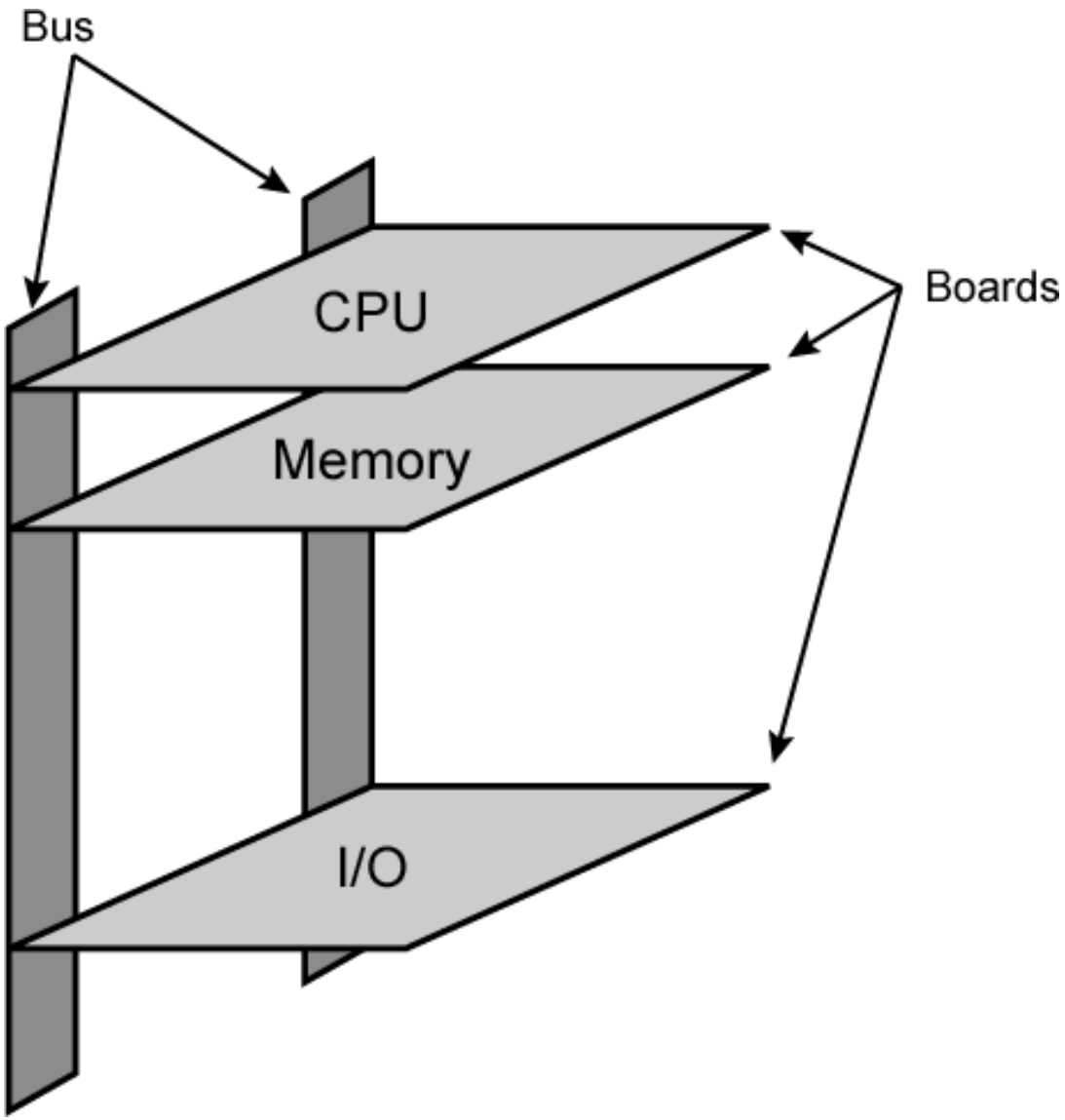

Single Bus Problems

- Lots of devices on one bus leads to:
  - Propagation delays
    - Long data paths mean that co-ordination of bus use can adversely affect performance
    - If aggregate data transfer approaches bus capacity
- Most systems use multiple buses to overcome these problems

Traditional (ISA) (with cache)

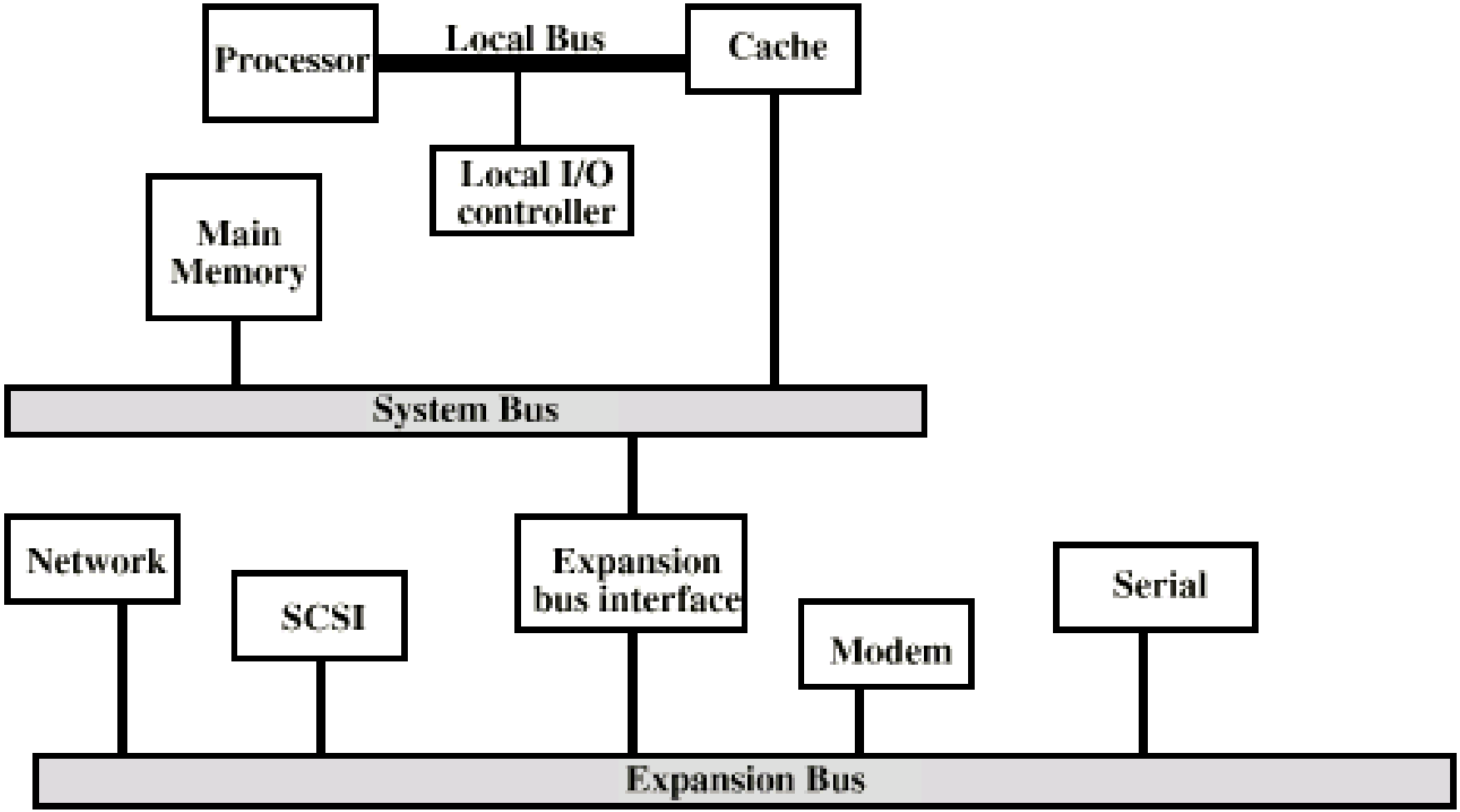

High Performance Bus

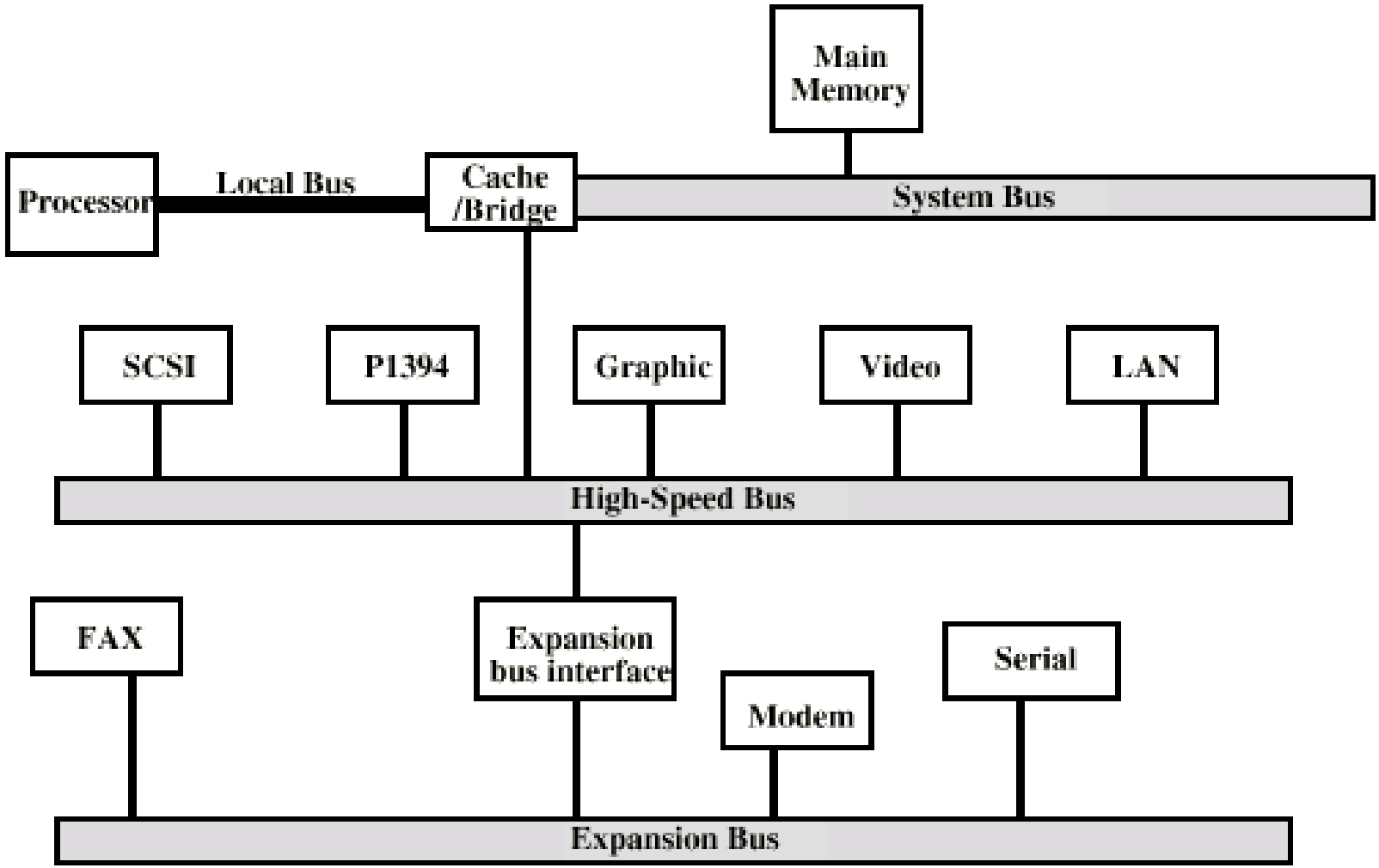

Timing

- Co-ordination of events on bus
- Synchronous
  - Events determined by clock signals
  - Control Bus includes clock line
  - A single 1-0 is a bus cycle
  - All devices can read clock line
  - Usually sync on leading edge
  - Usually a single cycle for an event

Synchronous Timing Diagram

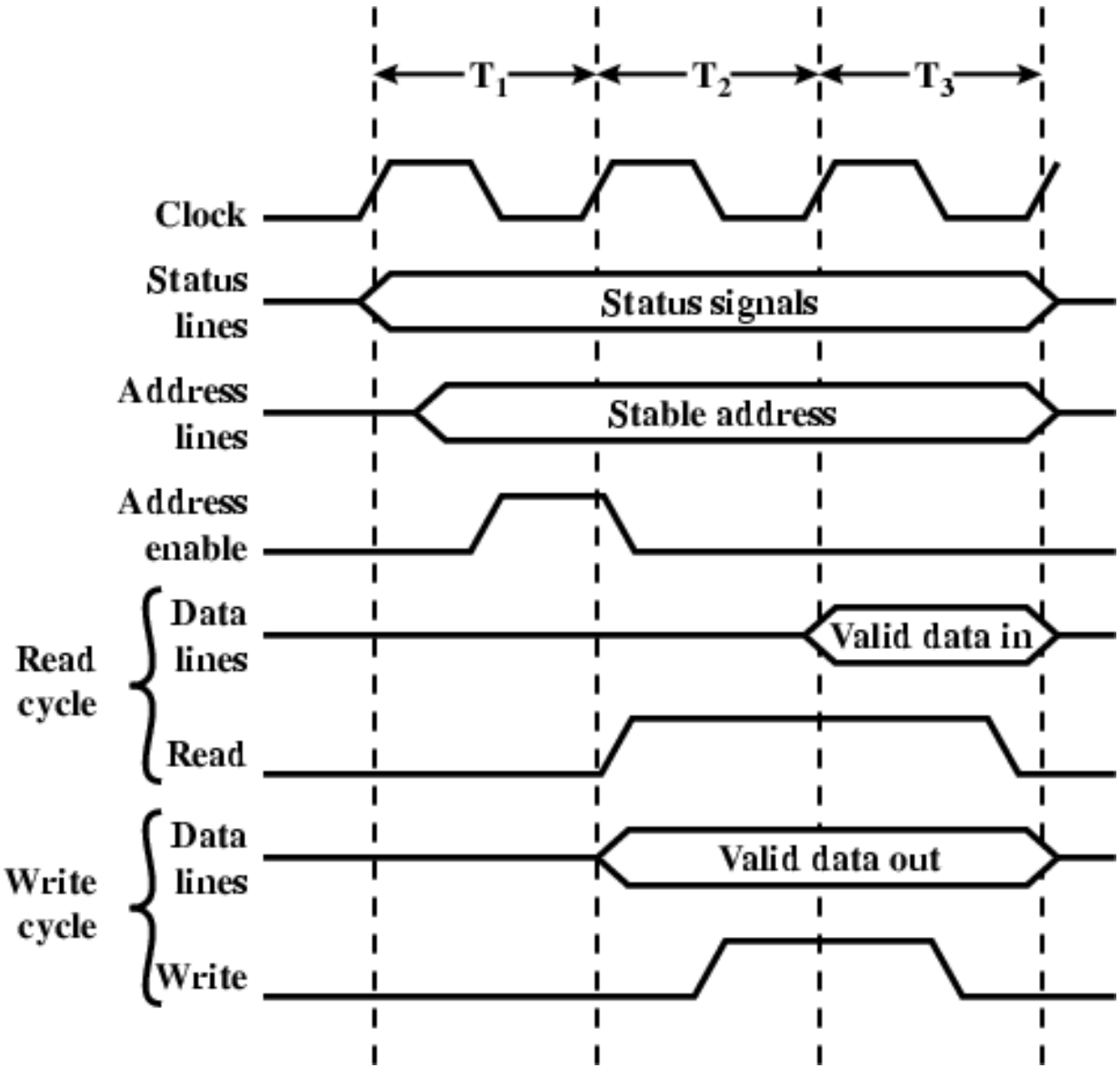

Asynchronous Timing – Read Diagram

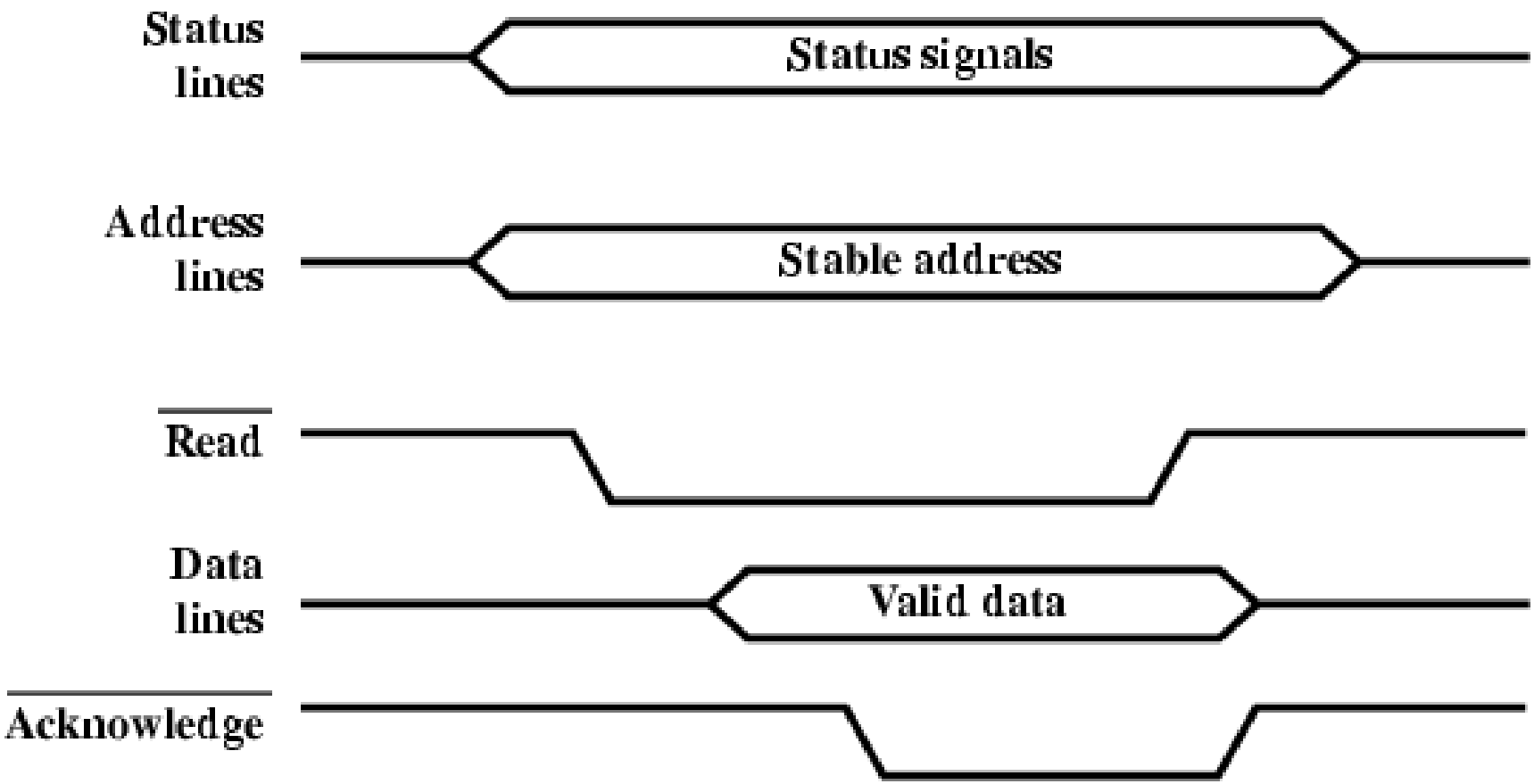

Asynchronous Timing – Write Diagram

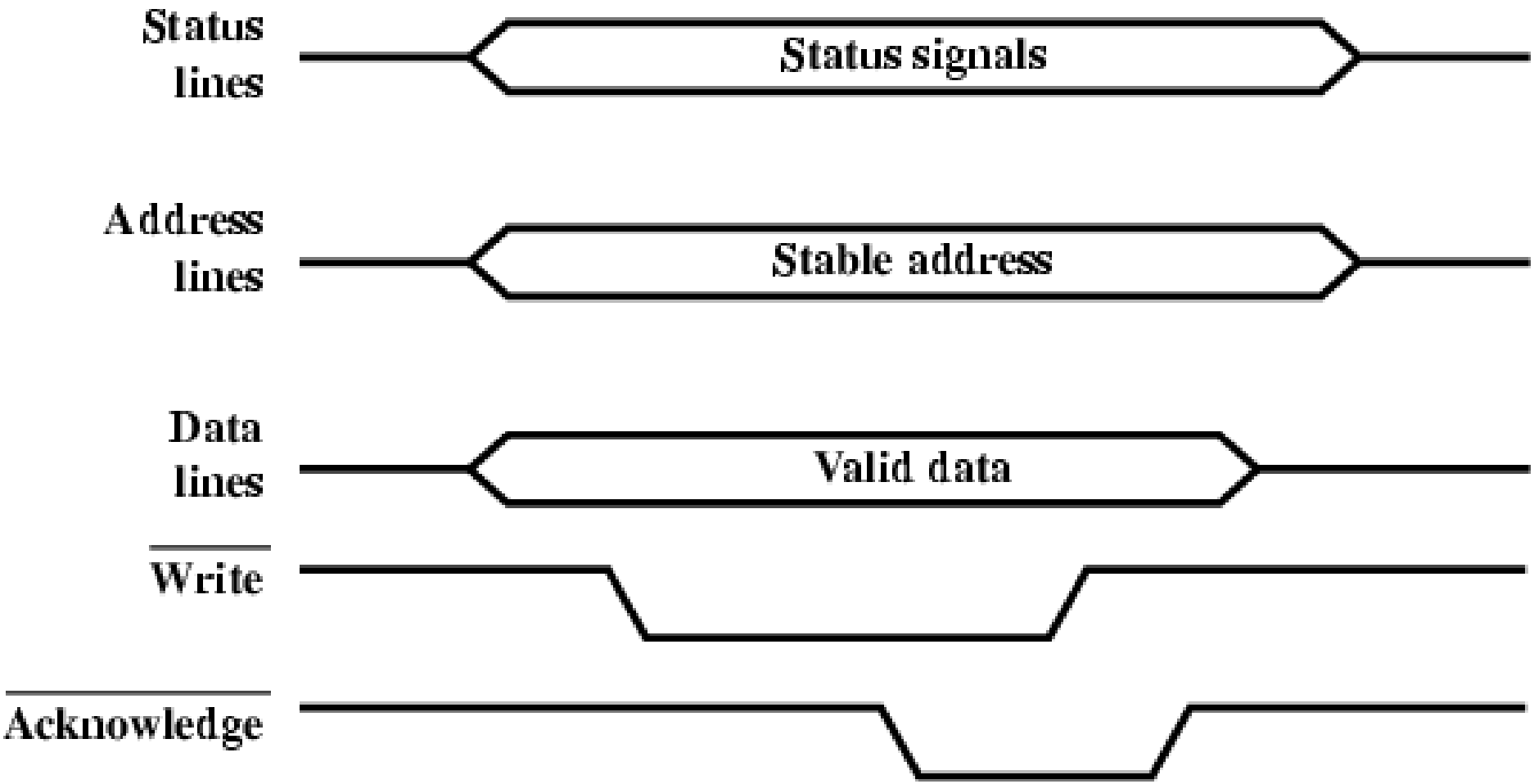

Von-Neumann Architecture

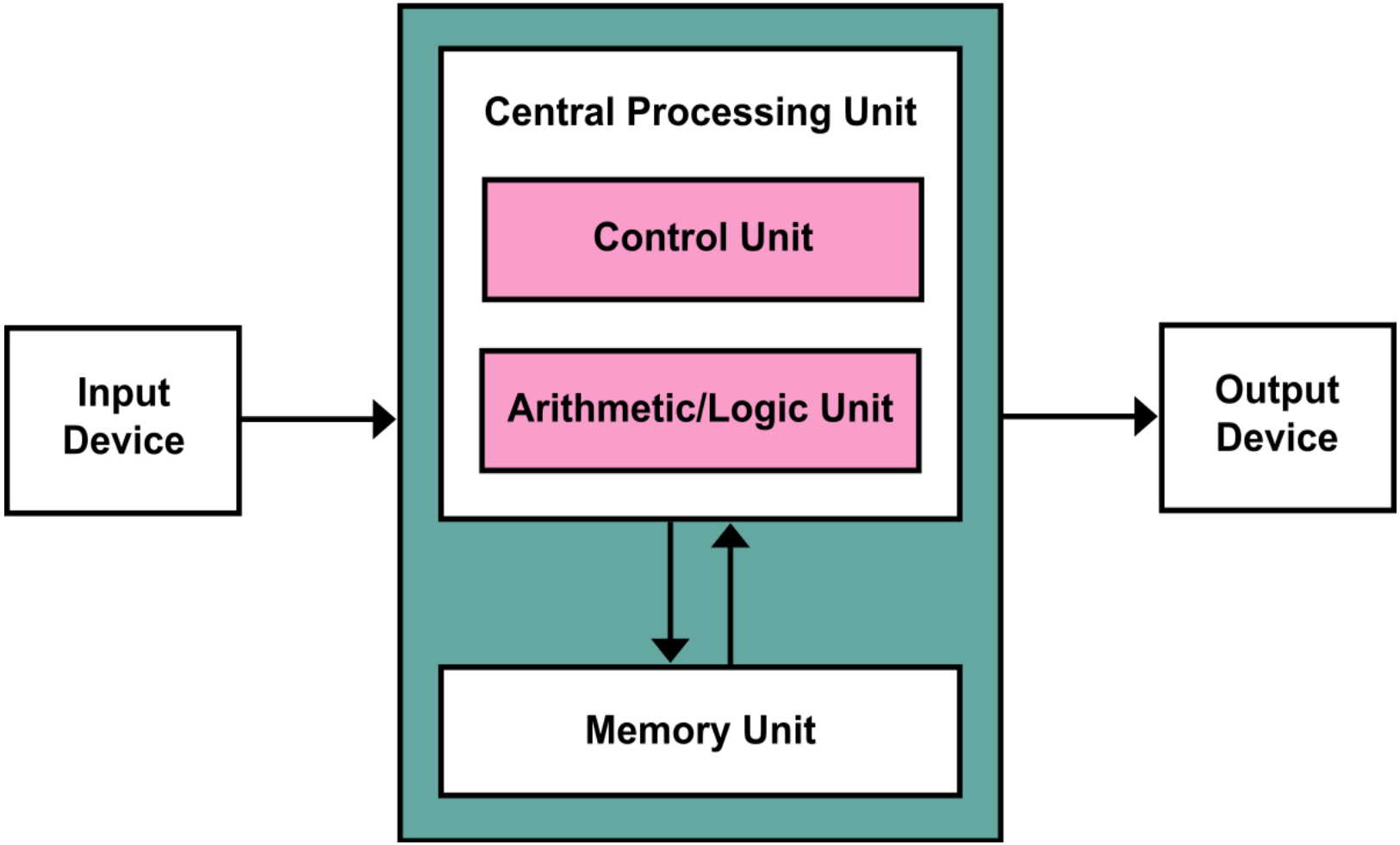

Von-Neumann Architecture

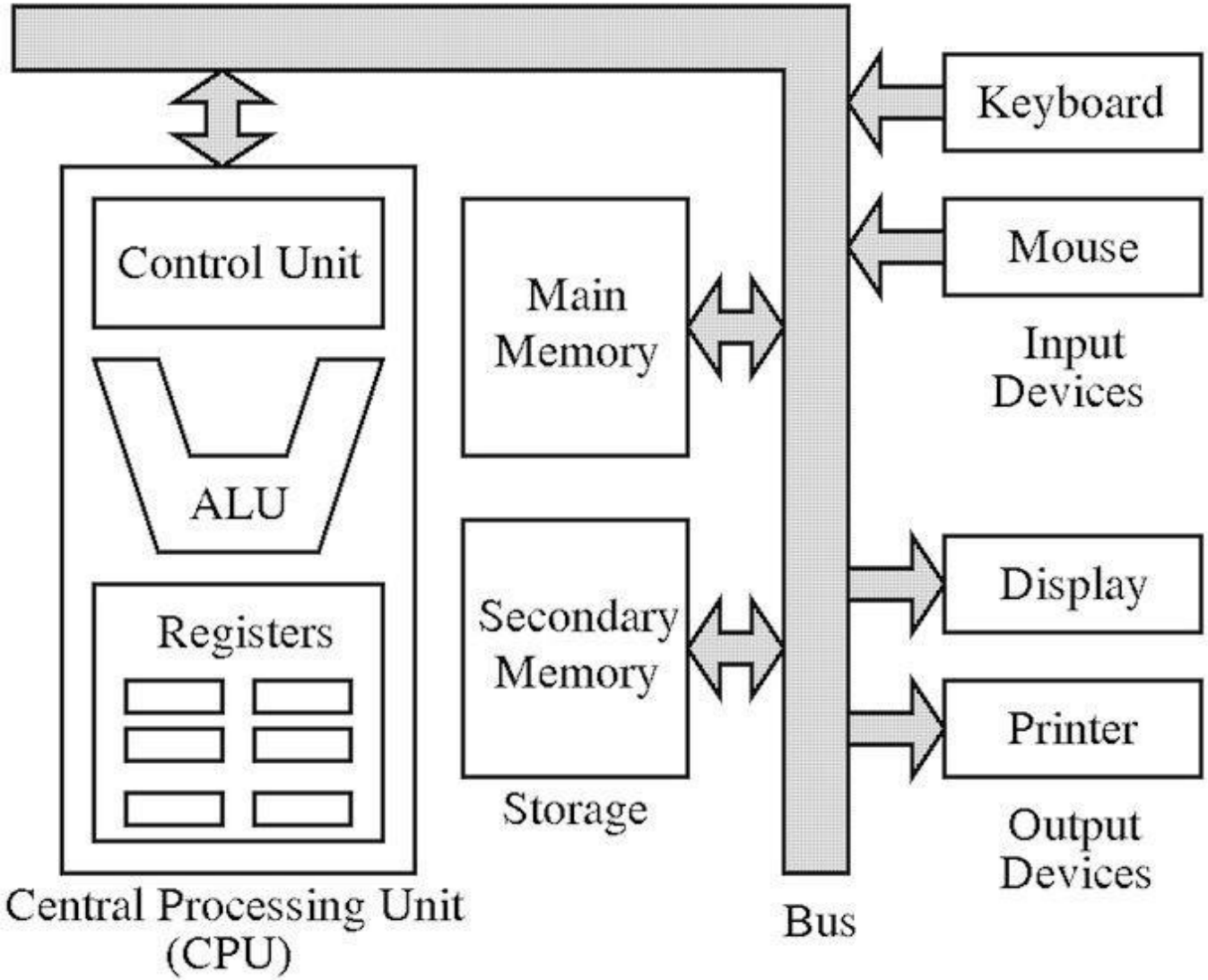

Von-Neumann Architecture Vs. Harvard Architecture

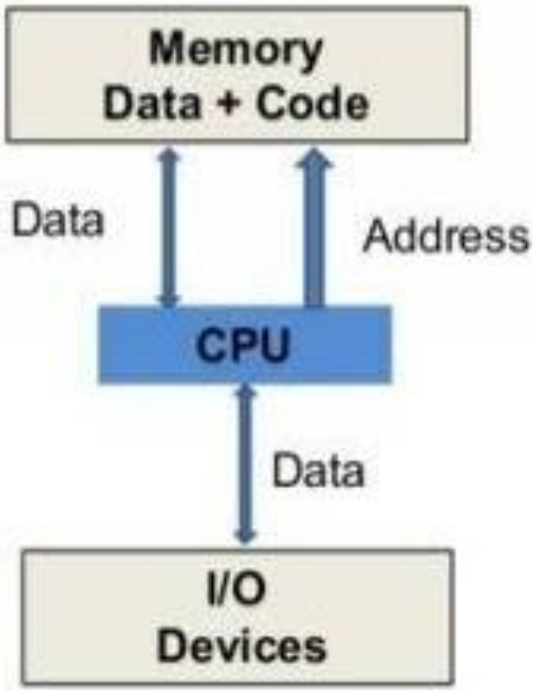

Von Neumann Machine

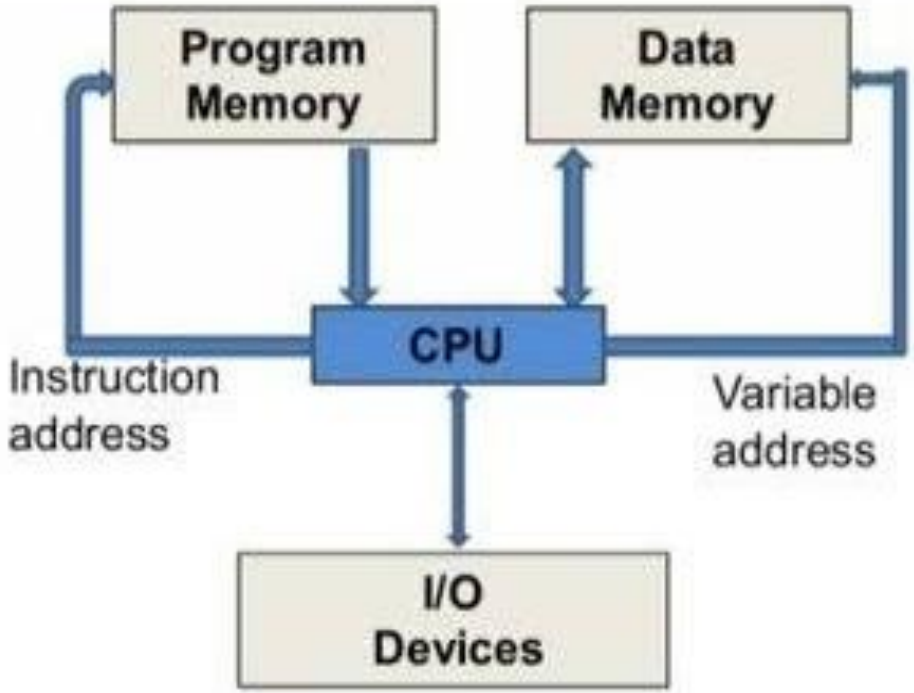

Harvard Machine

Von-Neumann Architecture Vs. Harvard Architecture

Von-Neumann Architecture	Harvard Architecture
This is based on stored program architecture and this mode is not a modern one	This is based on Harvard Mark I relay based model, and this is a modern computer model
Same memory addresses are used for both data and instructions	Separate memory addresses are used for data and instructions.
When execute one signal instruction, required two clock cycles	Signal cycle is enough for executing single instruction
Cost is less to create this model	Costly than Von Neumann model
CPU cannot access instructions and read/write data in same time	CPU can access instructions and read/write data in same time
This model most suitable for small computers and personal computers	This model mostly uses in signal processing and micro controllers.

BUS Comparison

Von Neumann Architecture

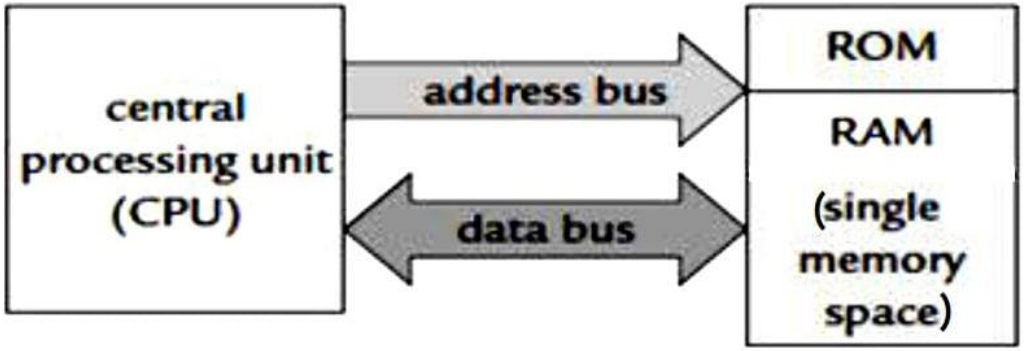

Harvard Architecture

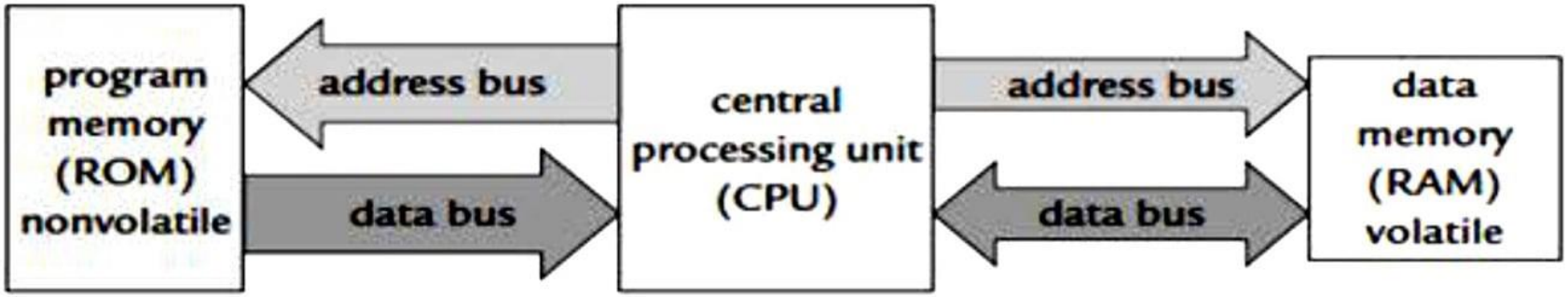

Thank You